Chemical Process Temperature Control System

332:416 Project 1, due February 19, 2004.

A chemical process temperature control system is represented by the following block diagram (Nise, 1992)

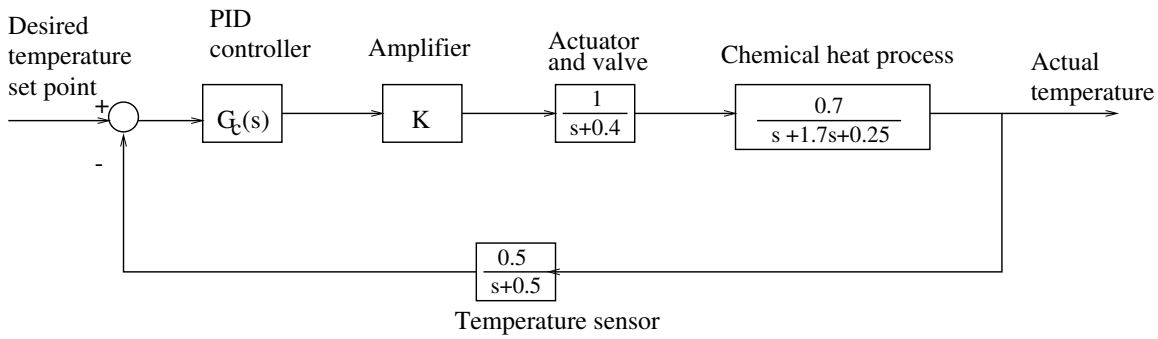

a) Design a PD controller $G_c(s)$ such that the compensated system has the 5%-settling time less than $15\,\mathrm{s}$ and the overshoot less than 0.1. Plot the root locus of the compensated system that shows that it passes through the desired operating point (use MATLAB functions `grid` and `axis`). Find the actual values for $t_{sc}, t_{pc}, os_c, e_{ssc}^{step}$ of the compensated control system. Find the closed-loop eigenvalues.
Hint: Due to nonunity feedback use formula (6.36) from the textbook to find the steady state value for the system output (actual temperature). Using $K^{'} = 0.7 \times 0.5 \times K$ simplifies design since the corresponding transfer function numerators can be replaced by 1.

b) For the static gain obtained at the desired operating point in Part (a) find the step response of the uncompensated system and determine $t_s, t_p, OS, e_{ss}^{step}$.

c) Design the PI controller such that the steady state error due to the unit step input is reduced to zero. Plot the step response of the system compensated by both PD and PI controllers.

HINT: Do first PI and PD design Examples 8.5 and 8.8.
CORRECTION: The system transfer function is

$$G(s) = \frac{0.7}{s^2 + 1.7s + 0.25}$$